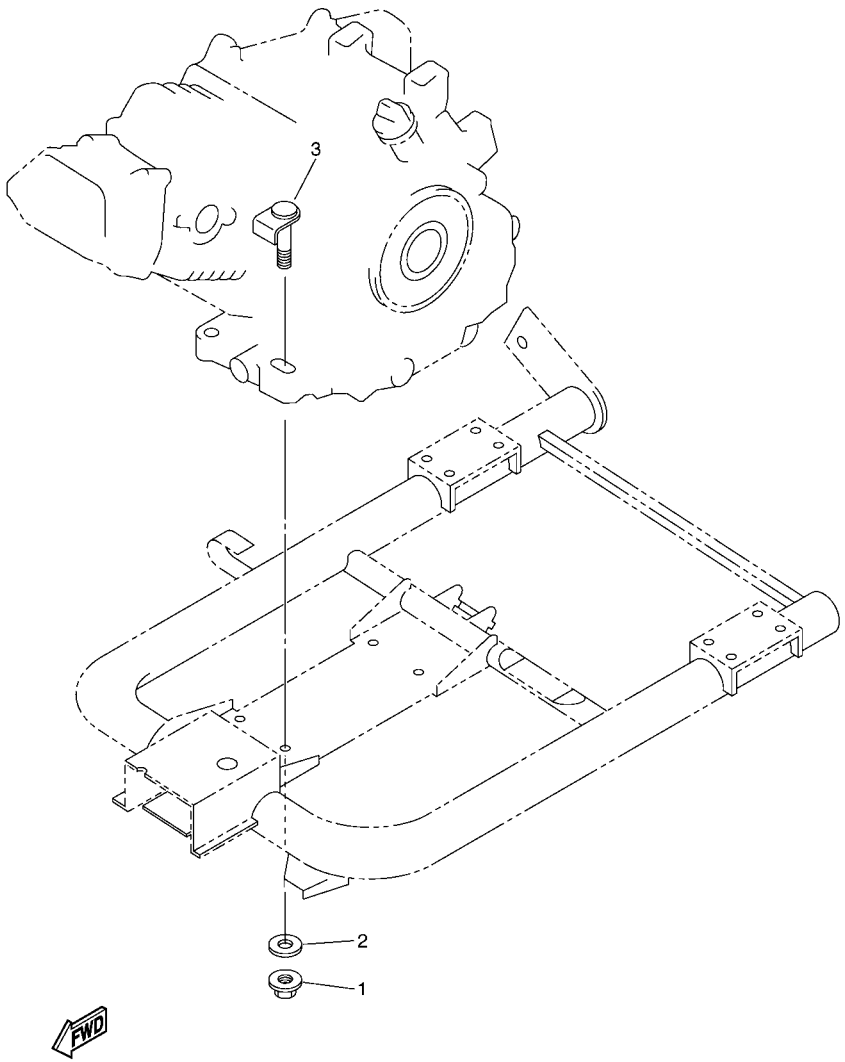

JU02100-D100

FIG. 10 ENGINE BRACKET

REF. NO.	PART NO.	DESCRIPTION	JW11					REMARKS
1	9560P–10200	NUT, FLANGE	4					
2	9290P–10200	WASHER	4					
3	JT0–21481–00	BOLT, ENGINE MOUNTING 1	4					